zumax

OMS1950

DENTAL MICROSCOPE

We Create Value for Our Customers with Our Services

All Digital iN Dental

WWW.ADND.EU
BELGIUM
LUXEMBOURG

Belgium
Tel. : +32(0)43.65.87.00
Luxembourg
Tel. : +352-48.82.43

DIGITAL SENSOR
SCANNER
PANORAMIC 2D - 3D
INTRA-ORAL RADIOLOGY
CAMERA
SOFTWARE

Brightness Control Knob

0-180 ° inclinable binocular tube with PD adjusting device

Wide field Eyepieces

Integrated LED illumination

5-step manual magnification changer

VarioDist Lens

Rotatable Handgrip

120 ° Coupling

0-180 ° inclinable binocular tube

F250mm Objective lens with fine focus

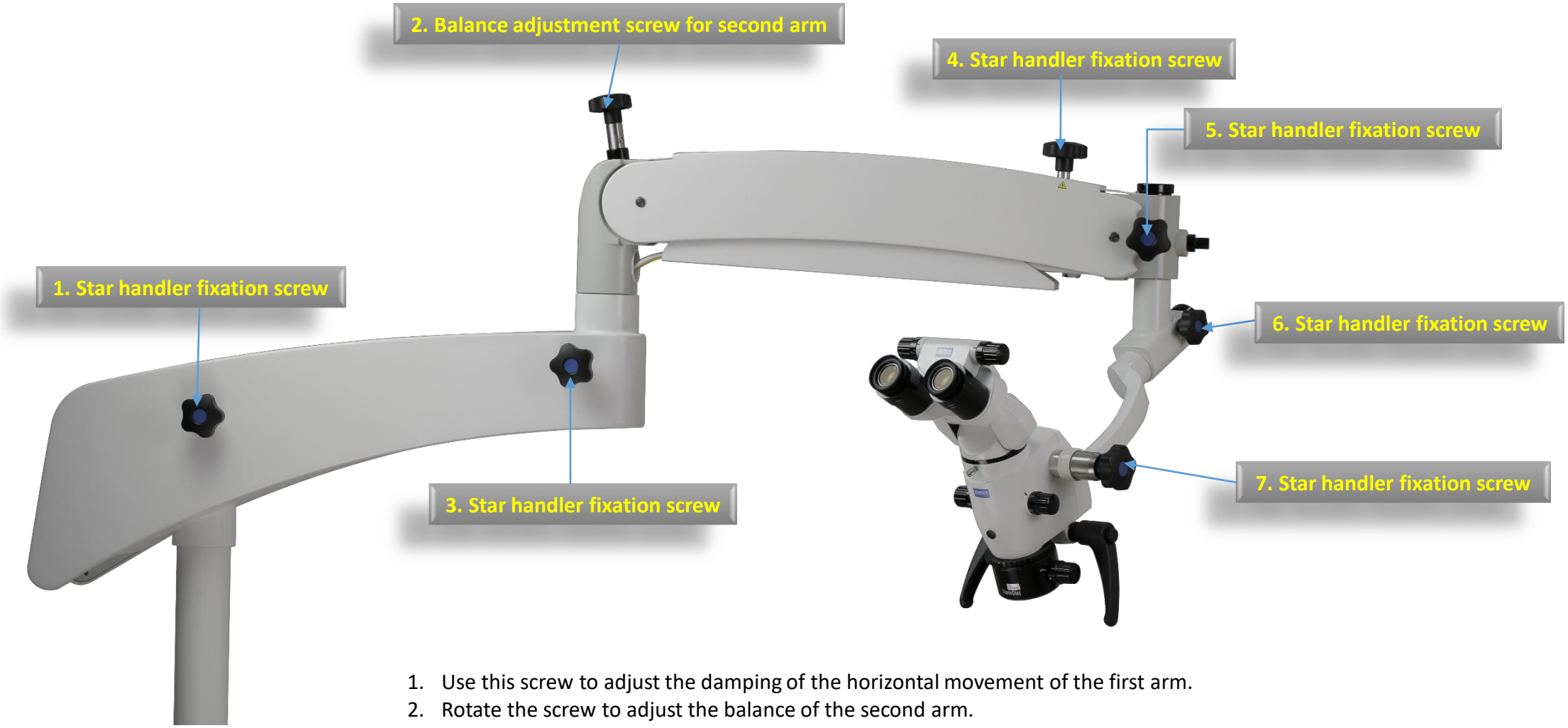

1. Use this screw to adjust the damping of the horizontal movement of the first arm.
2. Rotate the screw to adjust the balance of the second arm.
3. Hang the microscope on the scond arm using this nut.
4. Use this screw to adjust the vertical moving balance on the second arm.
5. Use this screw to adjust the damping of the 120 deg coupling.
6. Use this screw to adjust the damping of the microscope’s hanging axis.
7. Use this screw to adjust the damping of the microscope’s pitch.

Floor Stand

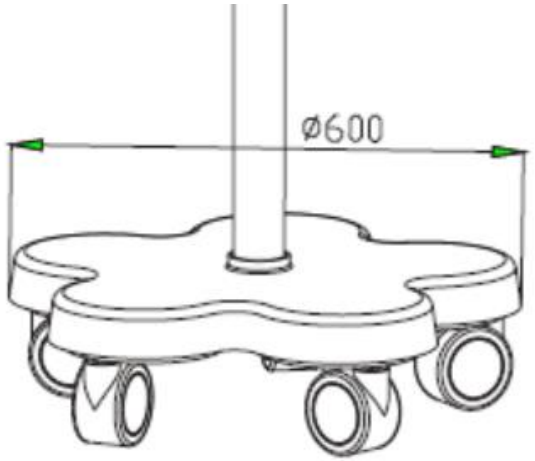

"Star" shaped base

Green LED technology

Integrated LED illumination

LEDs present many advantages over Halogen or Xenon light sources including lower Energy consumption, longer lifetime, improved robustness and greater durability and Reliability. In addition LEDs operate at a safe, low voltage, instead of the 25K volts Commonly found in Xenon lighting, but also have a light temperature characteristic Of natural daylight. Daylight enhances the visualization and allows much better Photography and documentation and makes it absolutely natural.

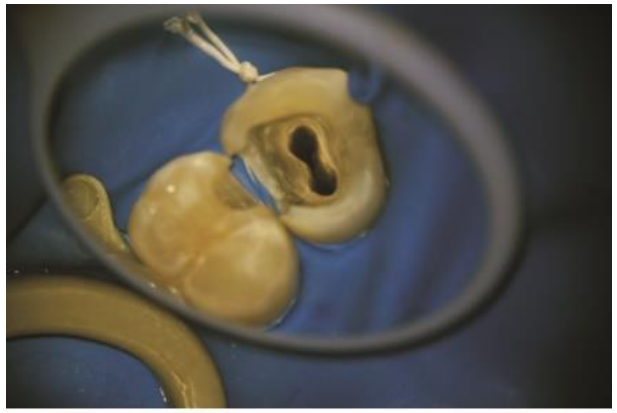

Halogen light

LED light

Optic Fiber

Without filter

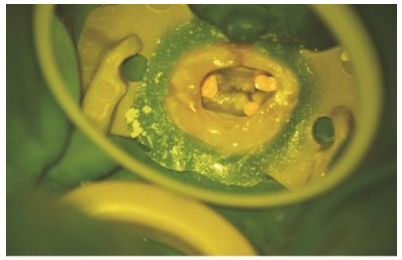

Yellow filter

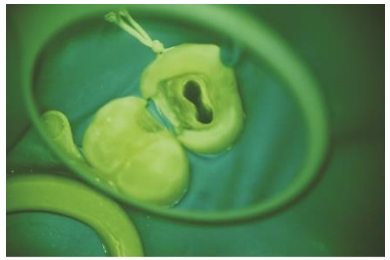

Green filter（Red free）

Integrated filters

Yellow filter: Prevents premature curing of composite.

Green filter: Improves detail visibility by enhancing the (red-free) contrast of tissue with a strong blood supply.

Simple Comfortable Operability

0° -180° inclinable binocular tube

Optics made of imported glass from Germany to reduce the optical aderration. All lenses are multi-coated and anti-reflective apochromatic.

Eye PD adjusting Device

Pupillary distance accurate numerical has been marked on the knob, the dentist can conveniently and quickly adjust to their eye PDs.

0° -180° inclinable binocular tube

Inclinable binocular feature the widest range of any binocular for user comfort and enhanced ergonomics for surgeons of all heights.

Wide field eyepieces

The wide field eyepieces are easily pushed into the binocular tube and have integrated eyecups with stepless adjustment. The eyepieces are perfectly suited for surgeons who wish to work with their eyeglasses on as eye refraction can easily adjusted with a high range of +7D to -7D.

10x, 16x, 20x eyepieces also available for eyeglass wearers

Objective Lens

- VarioDist Lens 190-300mm
- VarioDist Lens 250-400mm
- F250mm with fine focus
- F300mm with fine focus
- F350mm with fine focus
- F400mm with fine focus

VarioDist Lens

F250mm with fine focus

5-step Manual Magnification Changer

Example with F=250mm objective lens and 12.5x eyepieces,

Magnification Changer	0.4x	0.6x	1x	1.6x	2.5x
Magnification	**3.4x**	5.4x	8.5x	13.5x	21.2x
Diameter of Field of view (mm)	65	42	26	16	10

Micro Switch

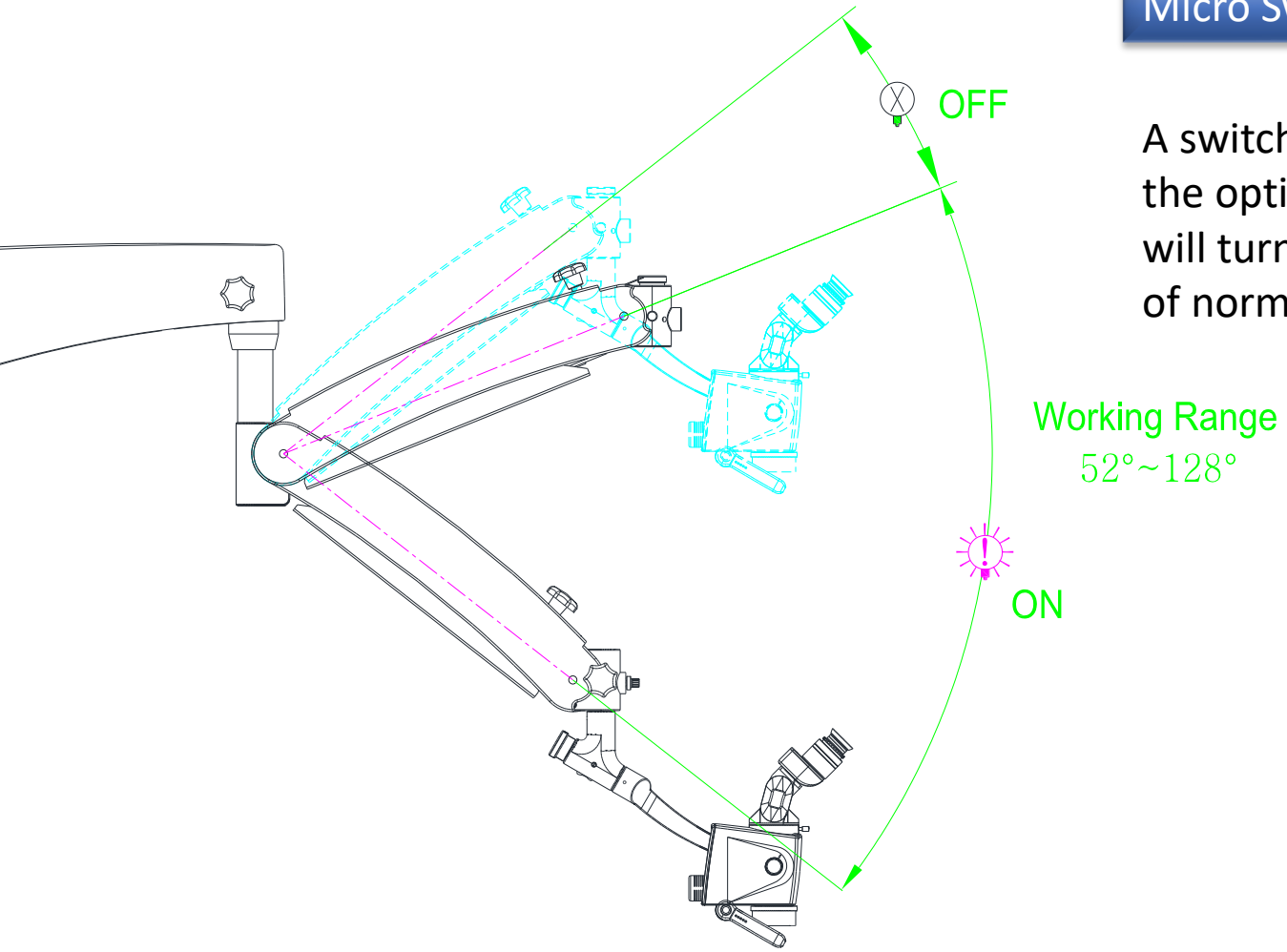

A switch is fitted into the arm. The light will keep “ON” when the optical head moves in normal working range and the light will turn off automatically while the optical head moves out of normal working range.

Extra long Arm

950mm arm can offer extra long reach for your microscope
(recommend for wall mount and ceiling mount microscope)

Built-in Full HD imaging device

Integrated full HD camera

Zumax provides an integrated full HD 1080/60P camera.

Integrated Standard Video Camera

Output: PAL Number of effective
pixsls: 752(H)·582(V) approx. 440K pixels

NTSC Number of effective
pixsls: 768(H)·494(V) approx. 380K pixels

More Optional Accessories

Wireless foot pedal for digital camera, camcorder or mobile phone

Stereo observation tube

Rotation Ring

Binocular Extender

30 deg Binocular Extender and Beam splitter combination

Dual iris diaphragm

Rota 360 digital camera adapter (Sony/Canon/Nikon)

Flash Adapter

Pendulum Function

Rotation Ring

+

Binocular Extender

or

30 deg Binocular extender
with beam splitter

External Photo and Video Solutions

Rota360 digital camera adapter

Easy 360 Mobile Phone adapter

Easy 360 Plus Mobile Phone adapter

2:8

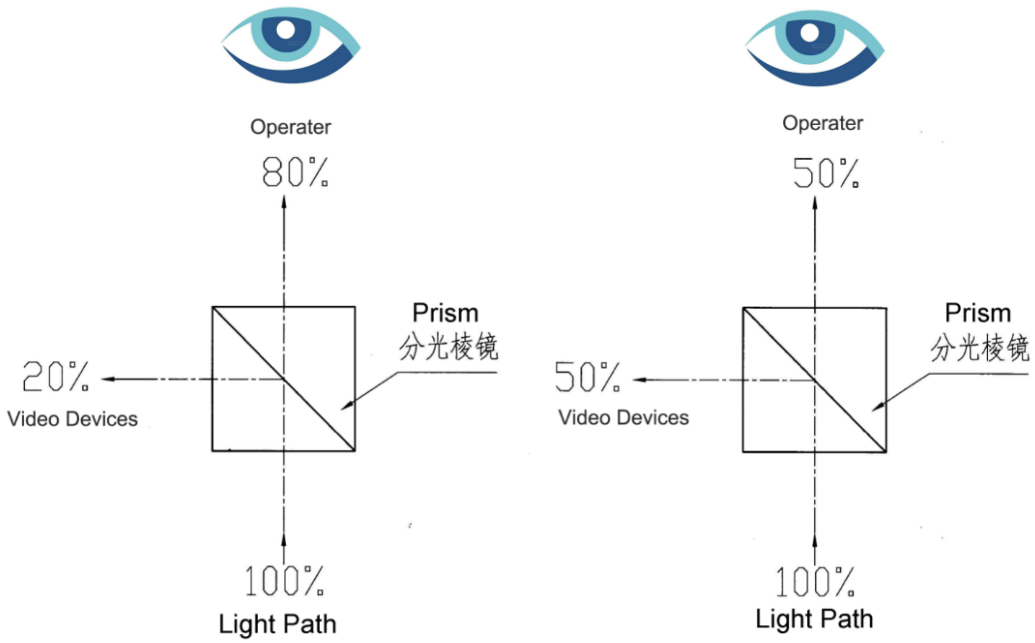
Operater
80%
Prism
分光棱镜
20%
Video Devices
100%
Light Path
Operater
50%
Prism
分光棱镜
50%
Video Devices
100%
Light Path

First Choice for DSD Users

- Enhance your photographs and documentation under microscope
- Coupler easy to adjust
- Easy removed or installed
- Twin flash or ring flash unit can be removed and installed easily

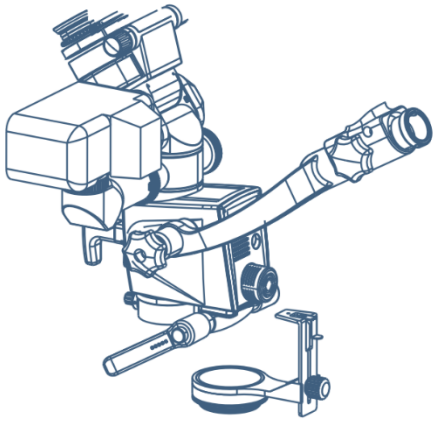

Canon MT-24EX Nissin MF-18

Nikon R1C1

Dual Iris Diaphragm

Dual iris diaphragm is uses to increase the depth of field.

Laser Filter

This filter can be used for the following laser wavelengths,
Diode Laser: 780-830nm;
Nd-YAG: 1064nm;
Er-YAG: 2940nm.

Bracket and arm for Monitor

Recommend Kits

Entry-level (Basic model)

- “Star” floor stand with wheels
- 0-180 deg inclinable binocular tube
- Integrated LED illumination
- 600mm Second arm
- 120 deg coupling
- Integrated yellow & green filters
- 5-step manual magnification changer
- F=250mm objective lens with fine focus
- 12.5x eyepieces

Middle-level

- “Star” floor stand with wheels
- 0-180 deg inclinable binocular tube with PD adjusting device
- Integrated LED illumination
- 600mm Second arm
- 120 deg coupling
- Integrated yellow & green filters
- 5-step manual magnification changer
- VarioDist Lens 190-300mm
- 12.5x eyepieces

Professional-level

- “Star” floor stand with wheels
- 0-180 deg inclinable binocular tube with PD adjusting device
- Integrated LED illumination
- 600mm Second arm
- 120 deg coupling
- Integrated yellow & green filters
- 5-step manual magnification changer
- VarioDist Lens 190-300mm
- 12.5x eyepieces

Accessory

- 30 deg binocular extender & Beam splitter combination
- Rotation Ring
- Digital Camera or Camcorder Adapter (Sony/Nikon/Canon)
- Easy 360 or Easy 360 Plus adapter
- Wireless foot pedal for digital camera or camcorder
- Inner power supply for digital camera, camcorder or mobile phone

Packing

Thank you!

All Digital iN Dental

WWW.ADND.EU
BELGIUM
LUXEMBOURG

Belgium
Tel. : +32(0)43.65.87.00
Luxembourg
Tel. : +352-48.82.43

DIGITAL SENSOR
SCANNER
PANORAMIC 2D - 3D
INTRA-ORAL RADIOLOGY
CAMERA
SOFTWARE

www.zumaxmedical.com